ISSN 2395-1621

Multimodal Medical Image Fusion - A Review

Shraddha S. Mane
M.E.(VLSI Design and Embedded System) Final year,
Department of Electronics and Telecommunication,
S.S.D.G.T.'s Sanjay Ghodawat Group of Institutions, Atigre, Kolhapur,
Maharashtra, India

Prof. Dr. S. R. Chougule
Professor, Department of Electronics and Telecommunication,
S.S.D.G.T.'s Sanjay Ghodawat Group of Institutions, Atigre, Kolhapur,
Maharashtra, India

Prof. S. C. Deshmukh
Assistant Professor, Department of Electronics and Telecommunication,
S.S.D.G.T.'s Sanjay Ghodawat Group of Institutions, Atigre, Kolhapur,
Maharashtra, India

ABSTRACT

Image fusion for the multimodal images would provide wide applications in the field of medical sciences. The main motivation is to capture the relevant information from the medical image sources and fuse them together to provide a single output which forms as an important system in the medical diagnosis. In this paper a fusion framework is provided for the multimodal medical image fusion using non-subsampled contourlet transform (NSCT). The input images are decomposed and fused images are constructed by using the inverse NSCT technique. Experimental results and comparative study show that the proposed fusion framework provides an effective way to enable more accurate analysis of multimodality images.

Keywords: Multimodal medical image fusion, non-subsampled contourlet transform, phase congruency, directive contrast.

ARTICLE INFO

Article History

Received: 25th March 2017

Received in revised form :

25th March 2017

Accepted: 25th March 2017

Published online :

4th May 2017

I. INTRODUCTION

Medical imaging has been playing a very important in the field of medical diagnosis since many years. This is a major source for the doctors to diagnose the diseases. Whatsoever the medical imaging has its own kinds of imaging techniques like X-ray, computed tomography (CT), magnetic resonance imaging (MRI). However the characteristics and results of each of these medical imaging techniques are unique. For instance, X-ray and CT can provide images as dense like structure with which the physiological changes could not be detected whereas in MRI images even the soft pathological tissues can be visualized better. As a result the anatomical and functional medical images are needed to be combined for better visualization and for accurate diagnosis. To serve this purpose the multimodal medical image fusion is an effective way to provide solution to generate information from medical image fusion. This fusion technique not only provides accurate diagnosis and analysis but also helps in reducing the storage cost by reducing storage to a single fused image. Various image fusion techniques have been discovered and implemented so far. These techniques are generally categorized into three stages. They include pixel level, feature level and decision level fusion. Most medical image fusion goes with the pixel level fusion. Pixel level fusion has the advantages of retaining the original measured quantities and found to be computationally efficient. And so this paper can also be considered with the pixel level fusion.

II. Literature review

So far, extensive work has been made on image fusion technique with various techniques dedicated to multimodal medical image fusion.

X-ray and computed tomography (CT) can provide dense structure like bones and implants with less distortion, but it cannot detect physiological changes [1].

The well-known pixel level fusion are based on principal component analysis (PCA), independent component analysis (ICA), contrast pyramid (CP), gradient pyramid (GP) filtering etc. Since, the image features are sensitive to

human visual system exists in different scales. Therefore these are not highly suitable for medical image fusion [2].
Recently with development of multi-scale decomposition, wavelet transform has been identified ideal method for image fusion.
However it is argued that wavelet decomposition is good at isolated discontinuities, but not good at edges and textured region. Further it captures limited directional information along vertical, horizontal and diagonal direction [3].
These issues are rectified in a recent multi-scale decomposition contourlet, and its non-subsampled version. Contourlet is a true 2-D sparse representation for 2-D signals like images where sparse expansion is expressed by contour segments. As a result it can capture 2-D geometrical structures in visual information much more effectively than traditional multi-scale methods [4].
The algorithm in [5] gives poor results with respect to other NSCT methods. This algorithm uses a directional vector obtained from high frequency sub-bands to fuse low frequency sub-bands. This directional vector essentially defines the clarity factor and is used to collect pixels from blur and clear regions. This algorithm [5] performs somewhat good in the case of multi-focus images but the performance degraded when it is applied to medical images. This is because this algorithm is not able to utilize prominent information present in low frequency effectively and results in the poor quality. In [6], a simple yet efficient real time image fusion algorithm is proposed considering human visual properties in spatial domain.
The algorithm [6] is computationally simple and implemented very easily in real-time applications. In image fusion scheme presented in [7], the wavelet transform of input images are appropriately combined, and the new image is obtained by taking inverse wavelet transform of fused wavelet coefficients. In [8], a simple but efficient algorithm is presented for image fusion employed in wavelet packet domain.
For fusion, all the source images are decomposed into low and high frequency sub-bands and then fusion of high frequency sub-bands is done by the means of Directive contrast while for low frequency median values is used. To reconstruct the fused image, inverse wavelet packet transform is performed [8]. In [9], NSCT is associated with pulse coupled neural networks (PCNN) and employed in image fusion to make full use of the characteristics of them. Spatial frequency in NSCT domain is input to motivate PCNN and coefficients in NSCT domain with large firing times are selected as coefficients of the fused image [9]. Algorithm in [10] presents, a novel image fusion framework which is proposed for multimodal medical images, which is based on non-subsampled contourlet transform and directive contrast.

III. Preliminaries

This section provides the description of concepts on which the proposed framework is based. These concepts include NSCT and phase congruency and directive contrast are described as follows.

Non-Subsampled Contourlet Transform (NSCT)

NSCT, based on the theory of CT, is a kind of multi-scale and multi-direction computation framework of the discrete images. It can be divided into two stages including non-subsampled pyramid (NSP) and non-subsampled directional filter bank (NSDFB).

Non-Subsampled pyramid (NSP)

The stage ensures the multi-scale property by using two channel non-subsampled filter bank, and one low frequency image and one high-frequency image can be produced at each NSP decomposition level. The subsequent NSP decomposition stages are carried out to decompose the low-frequency component available iteratively to capture the singularities in the image. NSP can result in k+1 sub-images, which consists of one low- and high-frequency images having the same size as the source image where denotes the number of decomposition levels. Fig. 1 gives the NSP decomposition with k=3 levels.

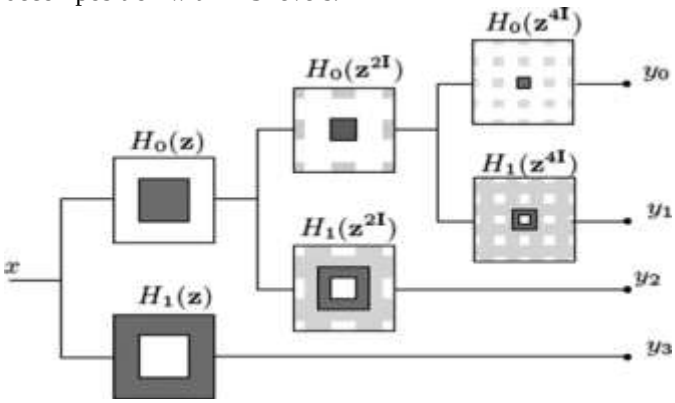

Fig. 1. Three-stage non-subsampled pyramid decomposition.

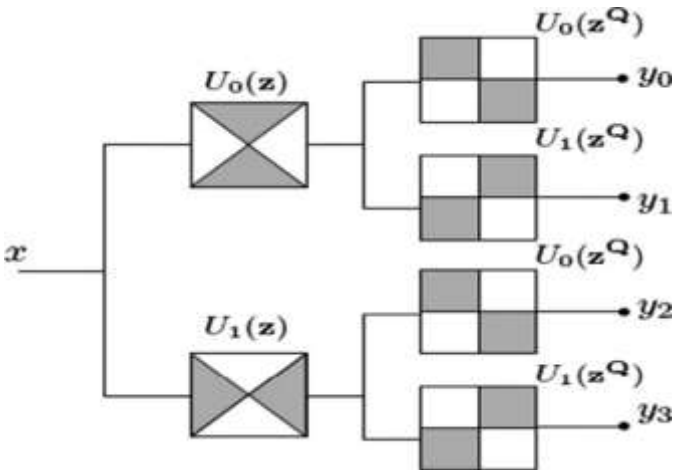

Fig. 2. Four-channel non-subsampled directional filter bank.

Non-subsampled Directional Filter Bank (NSDBF)

The NSDFB is two-channel non-subsampled filter banks which are constructed by combining the directional fan filter banks. NSDFB allows the direction decomposition with stages in high-frequency images from NSP at each scale and produces directional sub-images with the same size as the source image. Therefore, the NSDFB offers the NSCT with the multi-direction property and provides us with more precise directional details information. A four channel

NSDFB constructed with two-channel fan filter banks is illustrated in Fig. 2.

Phase Congruency

The phase congruency is the fusion rule used here to fuse the low frequency coefficients of the input images, which produces the contrast and brightness invariant representation of the low frequency coefficients of the image.

Thus it provides the benefit of selecting and combining the contrast and brightness invariant of the low frequency coefficients of the image. It provides the luminance and contrast invariant feature extraction in the low frequency coefficients of the image.

The phase congruency is mainly used in the feature perception

of the image based on local energy model, which postulates the important features of the image at points of pixels.

Directive Contrast in NSCT Domain

The directive contrast is one of the fusion rules to fuse the high frequency coefficients of the input images. A way to select high frequency coefficients is to know the better interpretation of the image.

The high frequency coefficient of an image generally denoted to the bright and sharp regions of the image which includes the region boundaries, edges, lines and so on.

The sum- modified- laplacian (SML) is integrated with the directive contrast to identify the better interpretation of the image as well as to produce accurate results.

IV. Proposed Multimodal Medical Image Fusion Framework

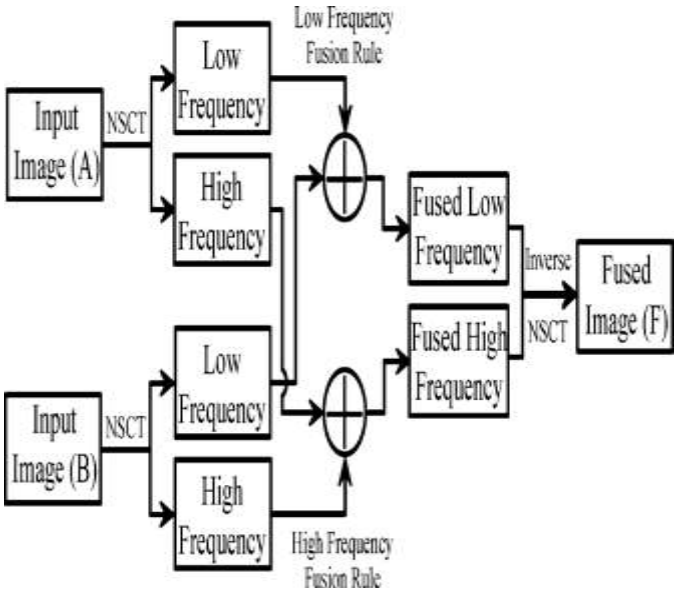

Fig.3 Block diagram of proposed multimodal medical image fusion framework

The input images taken are the multimodal medical images such as CT, X-ray. These images are obtained as input initially. The input images are decomposed by means of non-subsampled pyramid decomposition which is of three stages represented in fig.1.

Then the non-subsampled directional filter bank decomposition represented in fig.2 is used to decompose the images. Then the images are subjected to fusion of low and high frequency coefficients by means of the phase congruency and directive contrast respectively.

Low frequency fusion rule, phase congruency is used to obtain the fused low frequency image. High frequency fusion rule, directive contrast is used to fuse the high frequency coefficients of the image. The fused low frequency image and the fused high frequency images are then separately subjected to inverse NSCT transform to obtain the final fused image.

Results and Discussions

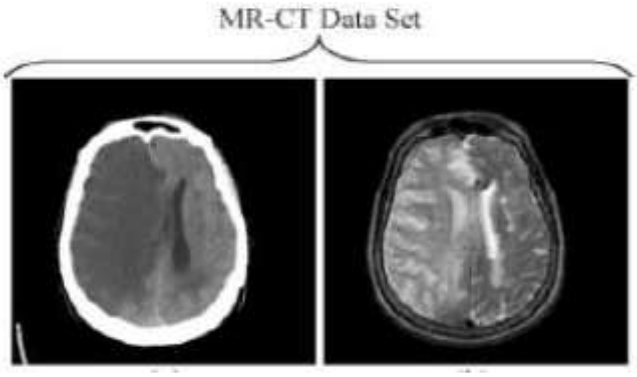

Fig 4. MR-CT Data Set

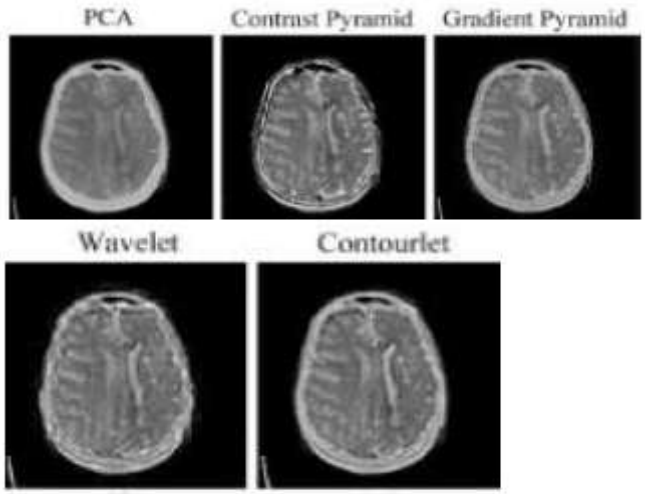

Fig.5. Other transformation methods

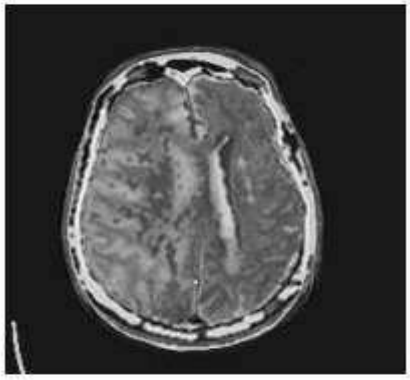

NSCT

Fig.6. NSCT fused image

From figure, it is clear that the proposed algorithm not only preserves spectral information but also improve the spatial detail information than the existing algorithms, which can also be justified by the obtained maximum values of evaluation indices. The PCA algorithm gives baseline results. PCA based methods give poor results relative to other algorithms. This was expected because this method has no scale selectivity therefore it cannot capture prominent information localized in different scales. This limitation is rectified in pyramid and multi-resolution based algorithms but on the cost of quality i.e., the contrast of the fuse image is reduced which is greater in pyramid based algorithms and comparatively less in multi-resolution based algorithms.

Among multi-resolution based algorithms, the algorithms based on NSCT performs better. This is due to the fact that NSCT is an multi-scale geometric analysis tool which utilizes the geometric regularity in the image and provide asymptotic optimal representation in the terms of better localization multi-direction and shift invariance. This is also justified by the fact that shift-invariant decomposition overcomes pseudo-Gibbs phenomena successfully and improves the quality of the fused image around edges.

The main reason behind the better performance is the proposed fusion rules for low- and high-frequency coefficients which extract all prominent information from the images and provide more natural output with increased visual quality. Therefore, it can be concluded that both the visual and statistical evaluation proves the superiority of the proposed method over existing methods.

V. Conclusion

In this paper, a novel image fusion framework is proposed for multi-modal medical images, which is based on non-subsampled contourlet transform and directive contrast. For fusion, two different rules are used by which more information can be preserved in the fused image with improved quality. The visual and comparisons demonstrate that the proposed algorithm can enhance the details of the fused image, and can improve the visual effect with much less information distortion than its competitors. Further to provide the practical applicability of the system this can be applied to clinical examples like brain affected with Alzheimer's disease, stroke and brain tumors.

References

[1] F. Maes, D. Vandermeulen, and P. Suetens, "Medical image registration using mutual information," *Proc. IEEE*, vol. 91, no. 10, pp. 1699–1721, Oct. 2003.

[2] L. Yang, B.L. Guo and W Ni, "Multimodality medical image fusion based on multiscale geometric analysis of contourlet transform," Neurocomputing, vol. 72,pp . 203-211,2008.

[3] F. E. Ali, I. M. El-Dokany, A.A. Saad, and F.E. Abd El-samie, " curvelet fusion of MR and CT images," progr. Electromagn. Res. C, vol.3,pp. 215-224,2008.

[4] A.L.da Cunha, J Zhou, nad M.N.Do, " The nonsubsampled contourlet transform: Theory, design and applications," IEEE Trans. Image Process.,vol.15,no.10, pp. 3089-3101. Oct 2006.

[5] Q. Zhang and B.L. Guo,"Multifocus image fusion using the non-subsampled contourlet transform," Signal Process., vol.89,no.7,pp. 1334-1346,2009.

[6] G. Bhatnagar, Q. M. J. Wu, and B. Raman, "Real time human visual system based framework for image fusion," in *Proc. Int. Conf. Signal and Image Processing*, Trois-Rivieres, Quebec, Canada, 2010, pp. 71–78.

[7] H.Li, B.S. Manjunath, and S.K.Mitra, " Multisensor image fusion using the wavelet transform," Graph Models Image Process., vol.57,no.3, pp. 235-245,1995

[8] G. Bhatnagar and B. Raman," A new image fusion technique based on directive contrast," Electron.Lett. Comput. Vision Image Anal.,vol.8, no.2, pp. 18-38, 2009.

[9] X.Qu, J.Yan, H.Xiao,and Z. Zhu. "Image fusion algorithm based on spatial frequency motivated pulse coupled neural networks in nonsubsampled contourlet transform domain," Acta Automatica Sinica, vol.8.no.2, pp. 1508-1514,2008.

[10] G. Bhatnagar, Q.M. Jonathan Wu, Zheng Liu. "Directive contrast based multimodal medical image fusion in NSCT domain." IEEE trans. Image Process., vol.15, no. 5, August 2013.

